BENINCA 100% Made in Italy

230 VAC

24 VDC

VIRTUAL ENCODER

KNX MQTT

BeUP

BILL

LINEAR TELESCOPIC OPERATOR

personalised release key

up to 4.0 m

CONTROL UNITS:

- **BILL30M**
  - BRAINY PLUS
  - * BRAINY
  - * HEADY
- **BILL40M**
  - BRAINY PLUS
  - * BRAINY
  - * HEADY
- **BILL4024**
  - * BRAINY24 PLUS
  - * BRAINY24
  - TRUST24
- **BILL50M**
  - BRAINY PLUS
  - * BRAINY
  - * HEADY

* With SE.MODULE module, standby power consumption complies with European Regulation (EU) 2023/826



Irreversible electromechanical geared motor, available with power options 230 Vac or 24 Vdc. Ideal for automation devices for wrought iron gates, this product is very small and suitable for a quick and easy installation. Worm screw protected by a scraper ring and stainless steel stem, suitable for dusty or sandy environments, or places with aggressive weather conditions. Available in right or left side versions.

230 Vac

- Irreversible 230 Vac electromechanical geared motor
- **With BRAINY PLUS control unit or SE.MODULE module, standby power consumption complies with European Regulation (EU) 2023/826**

24 Vdc | intensive use

- 24 Vdc irreversible electromechanical geared motor for intensive use
- **With TRUST24 control unit or SE.MODULE module, standby power consumption complies with European Regulation (EU) 2023/826**
- Anti-crushing system with amperometric sensor
- Possibility of battery operation

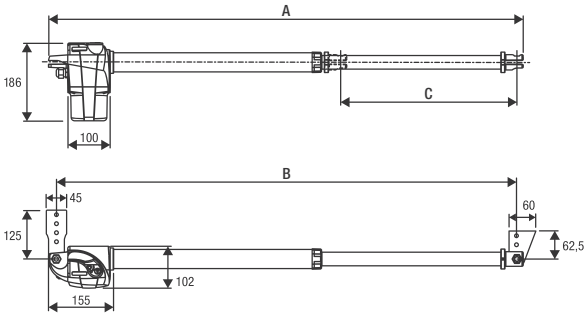

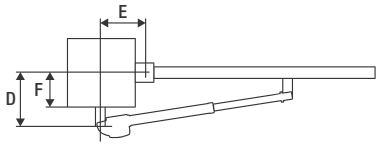

	A (mm)	B (mm)	C (mm)	D (mm)	E (mm)	F (mm)
BILL30	909	875	300	100-150	100-150	60-100
BILL40	1109	1075	400	100-200	100-200	65-150
BILL50	1309	1275	500	120-250	120-250	80-190

COMPLETE KITS	MOTORS	CONTROL UNIT	PHOTOCELLS	FLASHING LIGHT	TRANSMITTER
KBILL40M	2x **BILL40M**	1x **HEADY**	1x **PUPILLA.T**	1x **STAR**	1x **TO.GO2VA**
KBILL4024	2x **BILL4024**	1x **TRUST24**	1x **PUPILLA.T**	1x **STAR**	1x **TO.GO2VA**

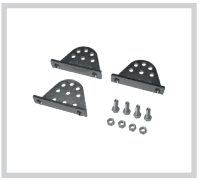

B.SR
Multiposition brackets for one operator.



BILL30.CO
Telescopic stem cover accessory.



BILL40.CO
Telescopic stem cover accessory.



BILL50.CO
Telescopic stem cover accessory.

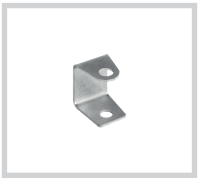

SNC.90
Bracket for 90° cable orientation.
Package of 2 pcs.



DU.V96
12 Vac/dc vertical electric lock, supplied with counterplate. Permits internal/external release.



DU.V90
12 Vac/dc horizontal electric lock, supplied with counterplate. Permits internal/external release.



DU.9990
Covering plate for DU.V90.



E.LOCK
230 Vac vertical electric lock, supplied with counterplate.



E.LOCKSE
Extended cylinder for E.LOCK electric lock. It allows unlocking gates up to 55mm-thick from the outside.



XLB.CB
Battery box fitted with universal bracket and cables. IP54.



DA.LB
Galvanized column for outdoor installation of LB box.

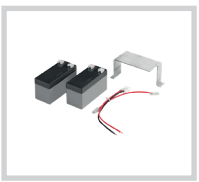

BRAINY24.CB-SW
Accessory equipped with 1.2 Ah batteries and support bracket.

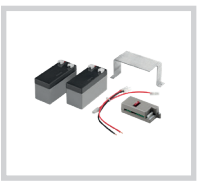

BRAINY24.CB
Accessory with CBY.24V battery charger, 1.2 Ah batteries and support bracket.

AUTOMATISMI BENINCÀ SpA • Via del Capitello, 45 • 36066 Sandrigo (VI) ITALY • T +39 0444 751030 • sales@beninca.com

TECHNICAL DATA	BILL30M*	BILL40M*	BILL50M*	BILL4024*
Use	**residential**	**commercial**	**commercial**	**commercial**
Motor supply	230 Vac (50-60Hz)	230 Vac (50-60Hz)	230 Vac (50-60Hz)	24 Vdc
Max absorbed current	1.1 A	1.1 A	1.1 A	5 A
Max Thrust	2800 N	2800 N	2800 N	2000 N
Opening time	16”	18”	21”	15”
Duty cycle	30%	30%	30%	intensive use
Standard stroke	300 mm	400 mm	500 mm	400 mm
Max stroke	320 mm	420 mm	520 mm	420 mm
Protection level	IP54	IP54	IP54	IP54
Operating temperature	-20°C /+50°C	-20°C /+50°C	-20°C /+50°C	-20°C /+50°C
Leaf max dimension	2.5 m	3.5 m	4.0 m	3.5 m
Weight / Items no. per pallet	6.1 kg / 62	6.7 kg / 48	6.9 kg / 48	5.5 kg / 48
Kit weight / Kits no. per pallet	--- / ---	15.5 kg / 30	--- / ---	14.6 kg / 30

*** Available in 115 Vac version**